Lambercy, O., Schröder, D., Zwicker, S. and Gassert, R. (2013). Design of a thumb exoskeleton for hand rehabilitation. Proc. International Convention on Rehabilitation Engineering and Assistive Technology (i-CREATe).

Design of a thumb exoskeleton for hand rehabilitation

Olivier Lambercy, David Schröder, Sven Zwicker and Roger Gassert
Rehabilitation Engineering Lab
ETH Zurich, Switzerland
olambercy@ethz.ch

ABSTRACT
Exoskeletons for hand rehabilitation typically focus on finger flexion-extension and do not support thumb-finger opposition, a crucial function for object grasping. This work presents the mechanical design, implementation and preliminary evaluation of a novel portable thumb exoskeleton to assist thumb opposition movements in the context of activities of daily living. A usability study with 12 healthy subjects demonstrated that the exoskeleton was comfortable, easy to don and provided a natural opposition motion while generating forces of up to 10 N at the tip of the thumb and weighing less than 150 g. This proof of concept is a first step towards the development of portable hand rehabilitation systems to be used for home-based therapy and assistance.

1. INTRODUCTION
Hand sensorimotor function is often impaired in stroke survivors, strongly limiting their independence and ability to perform activities of daily living [1]. Conventional rehabilitation focuses primarily on restoring gait and gross arm function, leaving only little time for exercises involving the hand. With the aim of providing new therapy solutions to increase the intensity and time devoted to hand rehabilitation and potentially providing long-term therapy and assistance in the home environment, several groups have investigated the use of robotic devices to complement conventional therapy approaches [2-4].

Exoskeletons are the most common type of hand rehabilitation robots and usually consist of an outer structure mounted to the back of the hand and transmitting motion to the fingers, typically to support finger flexion and/or extension. A wide variety of hand exoskeleton systems designed for stroke rehabilitation can be found in the literature, ranging from under-actuated single degree-of-freedom (DOF) devices actuating all fingers together [5] to fully actuated multi-DOF exoskeletons separately actuating each phalange [6]. Devices such as the HEXORR [3], or the EMG-controlled Hand of Hope [7] have been tested on stroke patients in clinical settings, and have shown to promote functional improvement in hand function.

Most exoskeleton devices actuate finger flexion/extension in order to train grasping and interaction with virtual or real objects.

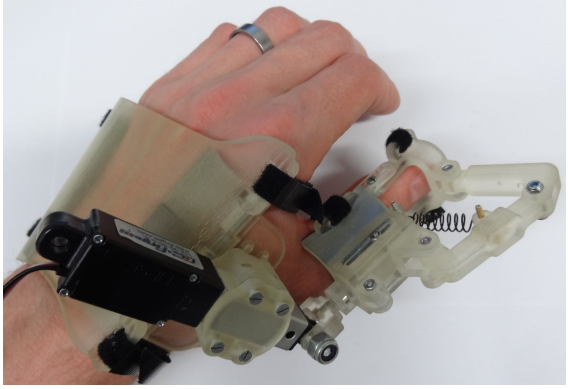

Figure 1. Prototype of the proposed thumb exoskeleton.

However, only a few systems actively support thumb motion, and in particular allow for thumb opposition, which is a key component of grasping. Further, many systems are stationary, i.e. fixed to a table, which limits their use to clinical or research laboratory environments, while a major objective would be to make exoskeletons portable, so that therapy and assistance could be provided within the context of real functional tasks. This further requires that the design be compact and lightweight, and that the palm be unobstructed by the device for natural object grasping and manipulation. In this paper we discuss the design requirements for a thumb exoskeleton module allowing for bi-directional thumb-finger opposition movements, and report on the design and evaluation of a first prototype. It is expected that actively supporting thumb opposition will be beneficial for rehabilitation of grasping, and could facilitate interaction and manipulation of real objects within the context of activities of daily living (ADL).

2. DESIGN
2.1 Requirements
Thumb kinematics: Thumb motion and the ability to achieve thumb-finger opposition is a key evolutionary feature of the human, thanks to which grasping and manipulating objects, and especially small objects, with one hand becomes possible. The thumb is composed of three joints; (i) the carpometacarpal joint (CMC), located at the base of the palm and mainly responsible for thumb opposition motion, as well as (ii) the metacarpophalangeal joint (MCP) and (iii) the interphalangeal joint (IP), mainly responsible for thumb flexion and extension [8]. Several studies

* This work was supported by the NCCR Neural Plasticity and Repair, and the Japanese-Swiss Science and Technology Cooperation through the Swiss National Science Foundation.

have attempted to precisely model thumb kinematics during opposition movement [9, 10], but a commonly used simplified model considers opposition as a combination of CMC flexion-extension (FE) and abduction-adduction (ABAD), with intersecting and orthogonal axes of rotation [10]. Values for active and passive range of motion (ROM) of each of these axes have been reported in the literature from measurements on healthy subjects as well as cadaver studies [11]. While these provide useful maximal values for the design of a thumb exoskeleton for rehabilitation purposes, it is more relevant to consider the active ROM during different grasping tasks corresponding to typical ADL (Table 1) [12]. Note that MCP and IP flexion-extension ROM were not considered in the design of this first prototype, as these DOF remain passive.

Thumb forces/torques: To provide meaningful assistance or resistance during movements corresponding to ADL, it is important to estimate the typical range of forces applied by the thumb. Kawasaki et al. estimated torques required to move a patient's thumb to be 0.3 Nm at the CMC joint for both FE and ABAD [13]. Cooney et al. report torques ranging from 0.06 to 1.4 Nm [14]. In terms of forces at the tip of the thumb during typical ADL, values were found to be in the range of 3-9 N [15]. This range of endpoint forces was selected for the design of the thumb exoskeleton, with the additional requirement of providing bi-directional forces.

Exoskeleton fixation: Attachment of the exoskeleton to the hand of the user is crucial to ensure proper alignment between the device and the joints, as well as ease and comfort of use. Attachment points should ideally be minimal so that a user can easily don/doff the device by himself/herself. To allow for manipulation of real objects, the palm of the hand should remain free and the mechanism should not interfere with a hand-held object, to allow tactile sensation of mechanical object properties. Furthermore, the exoskeleton should be adaptable to different hand sizes.

Portability: With the objective of using the exoskeleton in the context of ADL, the system should be wearable and not stationary. The weight of the system should thus be limited, especially considering possible integration of this thumb exoskeleton with a system actuating the other fingers.

Table 1 summarizes the key requirements considered in the design of the thumb exoskeleton.

Table 1. List of requirements for a thumb exoskeleton

Requirements	Range
Opposition motion (CMC flexion-extension: FE and abduction-adduction: ABAD)	In ADL: FE: 13-22°, ABAD: 13-20° [12] Maximal values: FE 53°, ABAD 42° [11]
Force at tip of the thumb	In ADL: 3-9 N [11, 15]
Torques at CMC joint	FE: 0.3 Nm [6] ABAD: 0.3 Nm [6, 16]
Weight	Less than 150 g
Palm	Free palm area to allow interaction with real objects

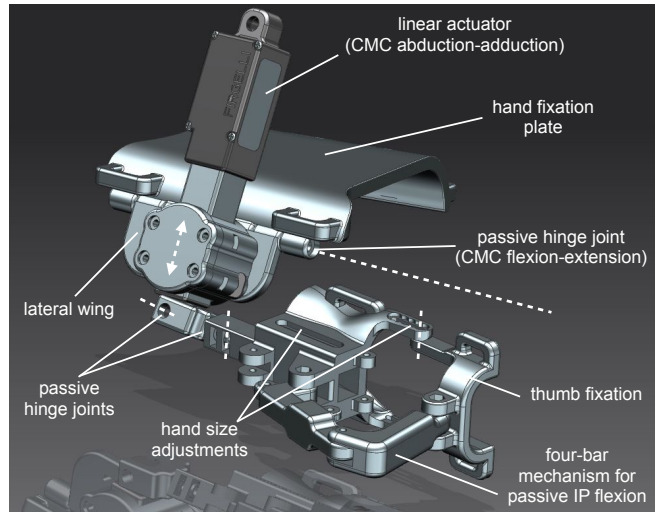

Figure 2. Detailed CAD rendering of the mechanical design of the thumb exoskeleton. A linear actuator moves the thumb in abduction-adduction, while passive hinge joints allows for CMC flexion/extension. The system is mounted on the dorsum of the left hand and attached with four Velcro® straps.

2.2 Mechanical design

Thumb-finger opposition combines CMC flexion-extension and CMC abduction-adduction. To realize this coupled movement, a serial mechanism (Figure 1) is proposed, consisting of a single actuated linear DOF and passive joints to allow movement of the thumb MCP along an arc, i.e. following the contour of a virtual cone with its tip at the base of the first metacarpal. The selected design consists of a lateral wing that is attached to a hand fixation plate fixed to the dorsal side of the hand (Figure 2). The latter is curved to follow the natural shape of the dorsum. The lateral wing can rotate around the axis of the metacarpal bone of the index finger, allowing for passive CMC flexion-extension. On the lateral wing, a linear actuator is mounted to control CMC abduction-adduction. The linear actuator is oriented so that its output is aligned with the thumb MCP joint. The output connects to a thumb fixation system. As the orientation of the thumb changes during opposition movement, the thumb fixation system is attached through two passive hinge joints. The entire mechanism builds on the biomechanical constraints of the thumb to achieve the opposition motion, while the passive hinges allow for natural thumb movement and partial correction of potential misalignments. The thumb fixation itself consists of a four-bar linkage allowing passive IP flexion-extension. Two of the linkages are padded supports to which the thumb is attached, at the level of the MCP and IP phalanges. A spring, connecting two of the linkages (Figure 1), preloads this system in a flexed position. The addition of this passive IP FE DOF allows users to better position the tip of the thumb for more comfortable object grasping. In future designs, a cable actuated drive will be added to pull against the spring and actively assist finger extension.

In order to adapt the exoskeleton to hands of different sizes, several components can be adjusted. The lateral position and orientation of the linear actuator fixation can be adjusted to ensure proper alignment with the MCP joint. Further, the two links attached to the thumb phalanges can be shifted according to the thumb dimensions. The hand fixation plate can easily be replaced

and adapted to the shape of the user's hand. Note that the mechanism was designed for a left hand, but could easily be modified to fit a right hand.

2.3 Implementation

As a proof of concept of the thumb exoskeleton design, a prototype was manufactured (Figure 1). All components of the exoskeleton were printed using rapid prototyping technology (material: Objet FullCure®720) and assembled using standard off-the-shelf components. For comfort and additional stability of the device on the hand of the user, the hand fixation plate was padded using standard medical foam. Four Velcro® bands (two at the palm and one at each phalange of the thumb) were used to fix the exoskeleton to the hand of the user.

For the linear actuator, a linear servomotor was selected (Firgelli L12-30-50-06-R, Firgelli Technologies Inc., Canada). This actuation method was chosen for the prototype as it offers the advantages of providing sufficient stroke (30 mm) and force (43 N) while being compact and lightweight. Nevertheless, an important drawback of this actuator is that it can only be controlled in position. The linear actuator was controlled with a PhidgetAdvancedServo 1061 (Phidget Inc., Canada) connected via USB to a standard desktop computer running LabVIEW 12.0 (National Instruments, USA). The linear actuator was powered externally using a portable 6 V power supply (4x 1.5 V batteries in series).

3. EVALUATION

The prototype was quantitatively evaluated according to the design requirements, as well as in a usability study aimed at qualitatively evaluating ease and comfort of use in twelve young healthy subjects.

3.1 Device performance

Range of motion of the exoskeleton was evaluated on a healthy subject wearing the device. The linear actuator was moved along its full stroke, and a joint goniometer was used to measure resulting thumb joint angles. The measured ROM of the lateral wing, corresponding to CMC flexion-extension was 0°-40°, where 0° is the rest position in which the hand is flat and the lateral wing aligned with the hand fixation platform. The ROM in abduction-adduction corresponded to 0°-12°, where 0° represents the rest position in the device.

The exoskeleton is mounted on the back of the hand and thumb with only the Velcro® straps cross the palm of the hand. The palm and fingers thus remain unobstructed and the hand can freely be used to interact with real objects. To validate the range of force the device can produce, a simple experiment was performed, where the exoskeleton was moved in opposition so that a force was applied in different grip configurations (e.g. grasping a plastic bottle, opposition with index fingertip, or opposition against the lateral side of the index finger in a key pinch). A single-axis force sensor (CentoNewton 40 N, LPM-EPFL, Switzerland) was placed at the contact point between the thumb and the object, respectively the index finger, to measure the interaction force during opposition. The subject was asked to remain passive during each task. Figure 3 illustrates an example of such a measurement, in the case of thumb-finger opposition, and the resulting force plot from the point of contact with the force sensor to full range of the linear actuator. The average interaction forces measured in the different grip configurations where in the range of 2-10 N.

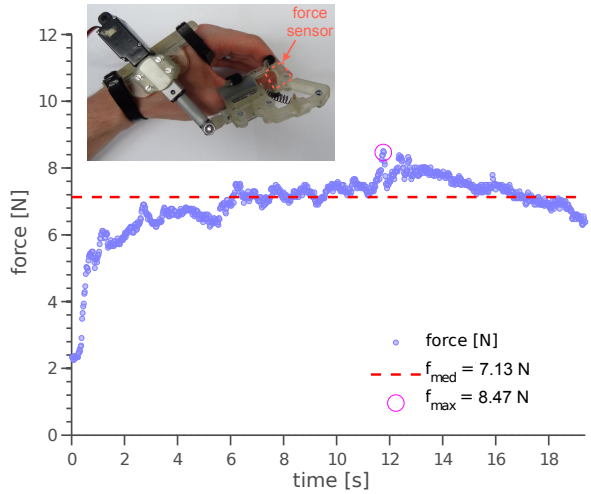

Figure 3. Grip force profile during finger opposition supported by the thumb exoskeleton, from the contact point until full range of motion of the linear actuator.

The weight of the device is 126 g, including the linear actuator (32 g). Electronics and the battery required to operate the exoskeleton could easily be placed remotely so that the weight is kept minimal.

3.2 Usability study

Twelve healthy volunteers (25.9±4.2 years old, 2 females and 10 males, all right-handed) were recruited to evaluate comfort and ease of use of the device. The exoskeleton was first adjusted to the person's hand size before the operator attached the device to the right hand of the user. Nine opposition movements were then performed by the exoskeleton from a minimum rest position (hand flat) up to a maximum opposition position and back, such that the entire ROM was experienced by the user wearing the device. The user was then instructed to doff the device and don it again by himself/herself before running a second set of nine movements. Finally, users were asked to fill in a questionnaire, in which they had to rate the following criteria on a scale from 1 (poor) to 10 (excellent): (i) comfort, (ii) provided assistive force, (iii) thumb motion, (iv) exoskeleton fixation, (v) overall device assessment.

Subjects felt comfortable while wearing the device as illustrated by an average score of 8.3±0.8. The evaluation showed that comfort of use depends on how well the device is adjusted and attached to the hand of the user. The force provided by the exoskeleton was deemed sufficient (8.8±1.7), although the present experiment did not involve object manipulation and was carried out only on healthy subjects. The thumb trajectory during opposition was deemed natural (7.6±2.1), however subjects felt that the thumb performed more of a rotational movement rather than pure opposition motion, i.e. CMC FE and ABAD. Fixations were found adequate (8.0±1.5) although some subjects complained about insufficient attachment at the level of the thumb phalanges. Subjects reported no pain due to the fixations, and 11 of the 12 subjects were able to properly don the device by themselves in less than one minute.

In general, subjects had a good overall impression of the device and gave an average score of 8.2±0.8 on a scale of 10 points.

4. DISCUSSION

This paper presented the design of a thumb exoskeleton for hand rehabilitation aimed at supporting thumb opposition with a single

actuated DOF and three passive DOF. The proposed mechanism combines CMC abduction-adduction and CMC flexion-extension to move the thumb MCP phalange along an arc, which is similar to other proposed exoskeleton designs [6]. A linear actuator controls CMC abduction-adduction while the passive DOFs allow for CMC and IP flexion-extension, relying on thumb biomechanical constraints to achieve the opposition movement. A proof of concept of the device was realized using rapid prototyping and a simple servomotor as linear actuator. While this choice of actuator would not be optimal in the context of a rehabilitation device, as it limits possible tasks to passive position controlled movements only, this was sufficient for a first characterization of the mechanism. The exoskeleton met most of the requirements, offering sufficient range of motion and interaction forces to support typical ADL such as grasping small objects. The device is lightweight (less than 150g), and compact, with the option to remotely place the electronics and battery away from the hand. Such a device could be used as a portable rehabilitation tool, with the possibility of providing assistance in real-life tasks, which could be more motivating than conventional therapy but still of therapeutic relevance [17]. Further, the lateral wing could be mounted to a different structure in order to integrate the thumb exoskeleton with a complementary system actuating the other fingers, such as proposed in [5], to control whole hand grasping with thumb opposition.

Results of the usability study illustrated a good appreciation of the exoskeleton by healthy subjects in terms of comfort and ease of use. Most importantly, subjects were able to properly don the device on their left hand within a minute, which further underlines the potential of this type of device for home use. The rapid prototyping design bears the potential for customization to the individual user and his/her impairments in the case of patients.

Future work will focus on placing the servomotor remotely, e.g. in a backpack, transmitting motion via a Bowden cable and introducing a series elastic element at the interface from the fixation plate to the thumb exoskeleton structure. This will further reduce the weight of the exoskeleton, and allow an active contribution of the user, by measuring the deflection of the elastic element. Further validation of the mechanism is necessary, e.g. with optical tracking, to assure that the induced movement is physiologically correct. Finally, a preliminary evaluation on stroke patients must be carried out to validate the kinematics, donning/doffing as well as force magnitude and ROM.

5. REFERENCES

[1] P. Raghavan, "The nature of hand motor impairment after stroke and its treatment," *Current treatment options in cardiovascular medicine,* vol. 9, pp. 221-8, Jun 2007.

[2] O. Lambercy, L. Dovat, H. Yun, S. K. Wee, C. W. Kuah, K. S. Chua, R. Gassert, T. E. Milner, C. L. Teo, and E. Burdet, "Effects of a robot-assisted training of grasp and pronation/supination in chronic stroke: a pilot study," *Journal of neuroengineering and rehabilitation,* vol. 8, p. 63, 2011.

[3] P. S. Lum, S. B. Godfrey, E. B. Brokaw, R. J. Holley, and D. Nichols, "Robotic approaches for rehabilitation of hand function after stroke," *American journal of physical medicine & rehabilitation / Association of Academic Physiatrists,* vol. 91, pp. S242-54, Nov 2012.

[4] P. Heo, G. M. Gu, S. J. Lee, K. Rhee, and J. Kim, "Current Hand Exoskeleton Technologies for Rehabilitation and Assistive Engineering," *International Journal of Precision Engineering and Manufacturing,* vol. 13, pp. 807-824, May 2012.

[5] J. Arata, K. Ohmoto, R. Gassert, O. Lambercy, H. Fujimoto, and I. Wada, "A new exoskeleton device for rehabilitation using a three-layered sliding spring mechanism," *Proc. International Conference on Robotics and Automation,* p. in press, 2013.

[6] S. Ueki, H. Kawasaki, S. Ito, Y. Nishimoto, M. Abe, T. Aoki, Y. Ishigure, T. Ojika, and T. Mouri, "Development of a Hand-Assist Robot With Multi-Degrees-of-Freedom for Rehabilitation Therapy," *Ieee-Asme Transactions on Mechatronics,* vol. 17, pp. 136-146, Feb 2012.

[7] N. S. K. Ho, K. Y. Tong, X. L. Hu, K. L. Fung, X. J. Wei, W. Rong, and E. A. Susanto, "An EMG-driven Exoskeleton Hand Robotic Training Device on Chronic Stroke Subjects Task Training System for Stroke Rehabilitation," *2011 Ieee International Conference on Rehabilitation Robotics (Icorr),* 2011.

[8] S. Bunnell, "Opposition of the thumb," *Journal of Bone and Joint Surgery,* vol. 20, pp. 269-284, 1938.

[9] A. Hollister, W. L. Buford, L. M. Myers, D. J. Giurintano, and A. Novick, "The Axes of Rotation of the Thumb Carpometacarpal Joint," *Journal of Orthopaedic Research,* vol. 10, pp. 454-460, May 1992.

[10] I. M. Bullock, J. Borras, and A. M. Dollar, "Assessing Assumptions in Kinematic Hand Models: A Review," *2012 4th Ieee Ras & Embs International Conference on Biomedical Robotics and Biomechatronics (Biorob),* pp. 139-146, 2012.

[11] W. P. Cooney, M. J. Lucca, E. Y. S. Chao, and R. L. Linscheid, "The Kinesiology of the Thumb Trapeziometacarpal Joint," *Journal of Bone and Joint Surgery-American Volume,* vol. 63, pp. 1371-1381, 1981.

[12] H. T. Lin, L. C. Kuo, H. Y. Liu, W. L. Wu, and F. C. Su, "The three-dimensional analysis of three thumb joints coordination in activities of daily living," *Clinical Biomechanics,* vol. 26, pp. 371-376, May 2011.

[13] H. Kawasaki, S. Ito, Y. Ishigure, Y. Nishimoto, T. Aoki, T. Mouri, H. Sakaeda, and M. Abe, "Development of a hand motion assist robot for rehabilitation therapy by patient self-motion control," *2007 Ieee 10th International Conference on Rehabilitation Robotics, Vols 1 and 2,* pp. 234-240, 2007.

[14] W. P. Cooney, 3rd and E. Y. Chao, "Biomechanical analysis of static forces in the thumb during hand function," *The Journal of bone and joint surgery. American volume,* vol. 59, pp. 27-36, Jan 1977.

[15] C. Pylatiuk and L. Doderlein, ""Bionic" arm prostheses. State of the art in research and development," *Orthopade,* vol. 35, pp. 1169-+, Nov 2006.

[16] P. Aubin, H. Sallum, C. Walsh, A. Coreia, and L. Stirling, "A pediatric robotic thumb exoskeleton for at-home rehabilitation," *Proc. International Conference on Rehabilitation Robotics,* pp. 1-6, 2013.

[17] D. J. Reinkensmeyer and M. L. Boninger, "Technologies and combination therapies for enhancing movement training for people with a disability," *Journal of neuroengineering and rehabilitation,* vol. 9, Mar 30 2012.