# Identification Methods for Structural Systems

**Prof. Dr. Eleni Chatzi**

System Stability - 26 March, 2014

**Overview**

- System Stability

# Linear System Stability

Assume given a dynamic system with input $u(t)$ and output $x(t)$. The stability property of a dynamic system can be defined from the system's impulse response $x_\delta(t)$ as follows:

**Asymptotically stable system:** The steady state impulse response tends to zero

$$\lim_{t\to\infty} x_\delta(t) = 0$$

**Marginally stable system:** The steady state impulse response is non-zero, but bounded (does not grow infinite):

$$\lim_{t\to\infty} x_\delta(t) < \infty$$

**Unstable system:** The steady state impulse response is unbounded:

$$\lim_{t\to\infty} x_\delta(t) = \infty$$

# Linear System Stability

**Stable System Example** - Assume the following SDOF system:

$$\ddot{x}(t) + 3\dot{x}(t) + 8x(t) = u(t) \xrightarrow{\mathcal{L}} s^2X(s) + 3sX(S) + 8X(s) = U(s)$$

Therefore, the associated Transfer Function is: $H(s) = \dfrac{1}{s^2 + 3s + 8}$

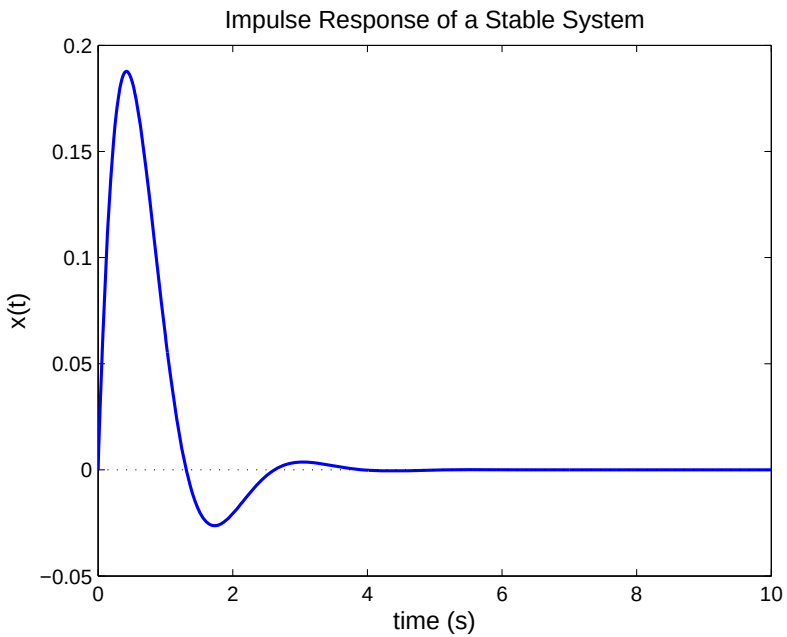


Observe that the roots of $s^2 + 3s + 8$ are: $s_1 = -1.5 + 2.4i$, $s_2 = -1.5 - 2.4i$

# Linear System Stability

**Marginally System Example** - Assume the following SDOF system:

$$\ddot{x}(t) + 9x(t) = u(t) \xrightarrow{\mathcal{L}} s^2X(s) + 9X(s) = U(s)$$

Therefore, the associated Transfer Function is: $H(s) = \dfrac{1}{s^2 + 9}$

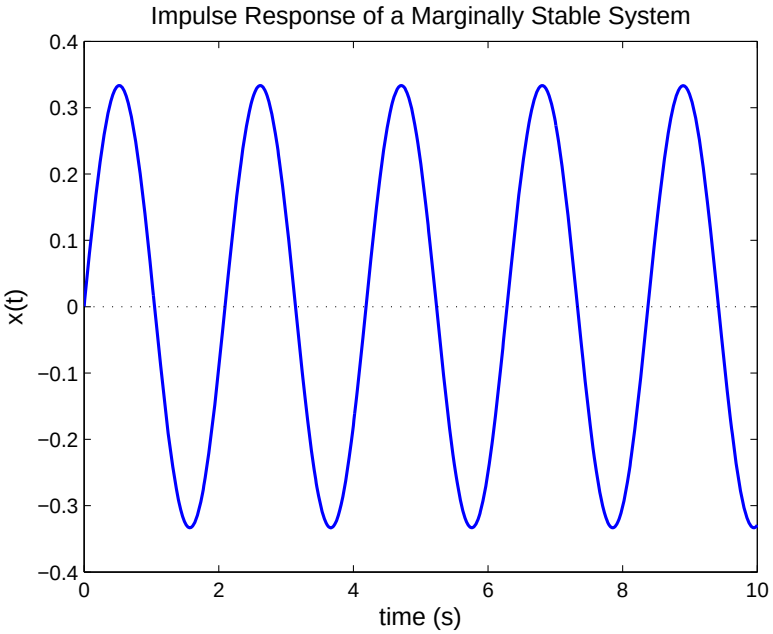


Observe that the roots of $s^2 + 9$ are: $s_1 = 3i$, $s_2 = -3i$

**Unstable System Example** - Assume the following SDOF system:

$$\ddot{x}(t) + 3\dot{x}(t) - 3/4x(t) = u(t) \xrightarrow{\mathcal{L}} s^2X(s) + 3sX(S) - 3/4X(s) = U(s)$$

Therefore, the associated Transfer Function is: $H(s) = \dfrac{1}{s^2 + 3s - 3/4}$

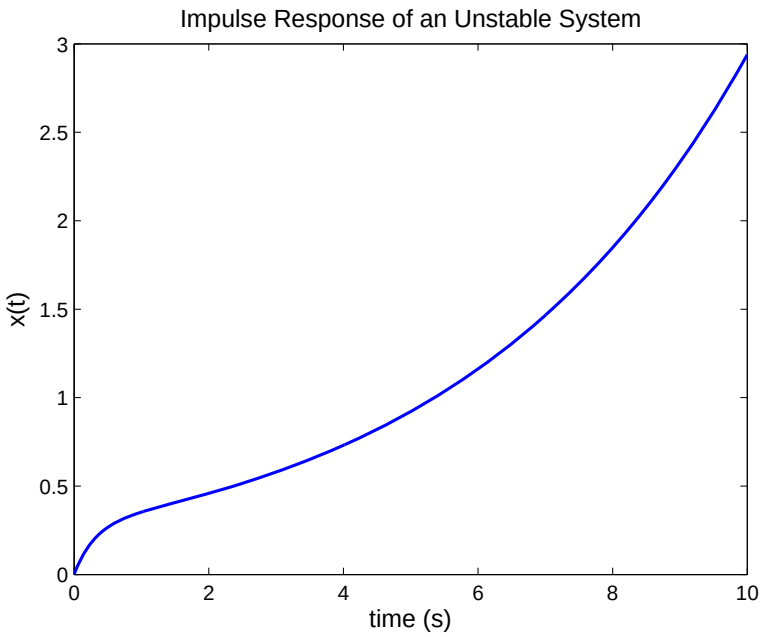


Observe that the roots of $s^2 + 9$ are: $s_1 = -3.23$, $s_2 = 0.23$

**Transfer Function - Poles & Zeros**

For the general case of linear systems examined herein. The TF will generally have the following form:

$$H(s) = \frac{K(s+z_1)(s-z_2)\dots(s-z_m)}{(s-p_1)(s-p_2)\dots(s-p_n)} \quad m < n$$

***Note:** If $m > n$, then the division can be carried out and the system can eventually be rewritten using a form analogous to the above.

The constants $z_i$ are called the zeros of the transfer function or signal, and $p_i$ are the poles.
Viewed in the complex plane, it is clear that the magnitude of $H(s)$ will be equal to zero at the zeros ($s = z_i$), and to infinity at the poles ($s = p_i$).

# Linear System Stability

**Reminder** - By using **partial fraction expansion** we can rewrite the TF in the following form:

$$H(s) = \frac{b_1 s + b_2}{(s - p_1)(s - p_2)} + \frac{b_3}{s - p_3} + \dots$$

Where $p_1 = p_2*$ (complex conjugate roots) and $p_3$ is a real root.

In order to derive $b_1$, $b_2$ multiply both sides by $(s - p_1)(s - p_2)$, and then evaluate at $s = p_1$.
In order to derive $b_3$ multiply both sides by $(s - p_3)$, and then evaluate at $s = p_3$.

It is then easy to obtain the system's response $x(t)$ to an impulse input $u(t) = \delta(t)$ by simply applying the **Inverse Laplace** transform on $H(s)$:

$$x(t) = \mathcal{L}^{-1}\left\{H(s) * U(s)\right\} \overset{U(s)=\mathcal{L}\{\delta(t)\}=1}{\rightarrow} x(t) = \mathcal{L}^{-1}\left\{H(s)\right\}$$

## Stability Rules

For systems that are linear and time-invariant (i.e their **TF** does not depend on time) their stability is defined by the roots of the characteristic polynomial, i.e., the poles of the TF. Specifically:

- **Asymptotically Stable**
  All the roots of the characteristic polynomial lie in the left half plane ($Re(s) < 0$)
- **Unstable**
  At least one root of the characteristic polynomial lies in the right half plane ($Re(s) > 0$)
- **Marginally Stable**
  No solution grows unbounded but some do not decay ($Re(s) \leq 0$)

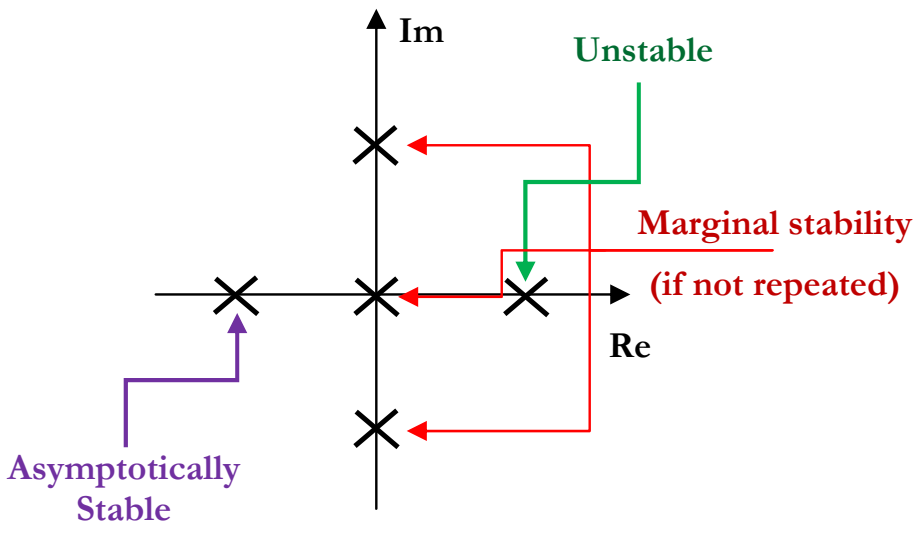

**Interpretation**

The poles of the TF are essentially the roots of the characteristic polynomial that corresponds to the original ODE of the system. Therefore they govern the system's homogeneous response.

A root $s = \sigma \pm \omega i$ signifies that the homogeneous response will be of the type:

$$x = e^{st} = e^{\sigma t}(C_1 sin\omega t + C_2 cos\omega t)$$

It is now apparent that a positive real part for $s$ would be linked to an exponentially increasing response which is the cause for instability.

## Pole Zero Plots

Examining the Pole Zero plots of the previous examples, helps illustrate the previous point (MATLAB: pzmap)

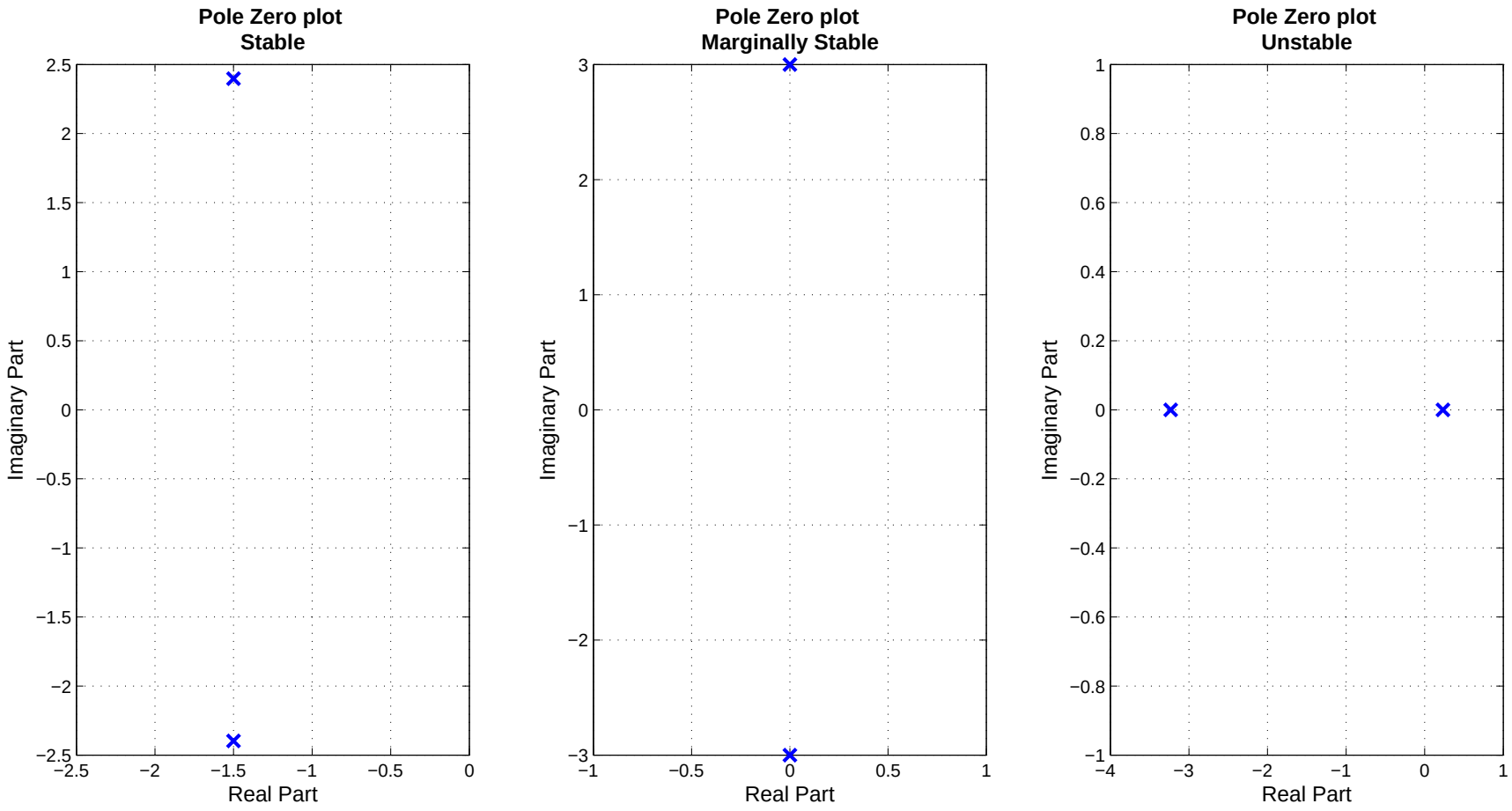

## Considerations

What happens in the case of a repeated root? Assume we have a repeated root at $s = p_k$ with multiplicity $l$. Then the Transfer Function is written as follows:

$$H(s) = \frac{K(s - z_1)(s - z_2)\dots(s - z_m)}{(s - p_1)\dots(s - p_k)^l\dots(s - p_n)}$$

Then the partial fraction expansion, focusing on that term, will be of the form:

$$H(s) = \cdots + \frac{b_1}{s - p_k} + \frac{b_2}{(s - p_k)^2} + \dots + \frac{b_l}{(s - p_k)^l} + \cdots$$

Hence, the impulse response will be of the form

$$x(t) = h(t) = \cdots + b_1 e^{p_k t} + b_2 t e^{p_k t} + \dots + \frac{b_l}{(l-1)!} t^{l-1} e^{p_k t} + \cdots$$

## Considerations - Repeated Root

However for $p_k = \sigma + i\omega$ with $\Re(p_k) = \sigma < 0$ we have that:

$$\int_o^\infty t^{l-1} e^{p_k t} < \infty$$

This signifies that these terms are bounded, i.e., they do not grow to infinity and therefore our previously derived criteria for stability hold.

**Example:**
Impulse Response of
$H(s) = \dfrac{1}{(s+1)^2}$
Repeated root $s = -1$